RESEARCH ARTICLE OPEN ACCESS

A Shipshape Prepaid Energy Metering Organism

R.Deepakumar [1], S.Latha [2]
PG Research Scholar [1], Assistant Professor [2]
Department of Electrical and Electronics Engineering
E.G.S. Pillay Engineering College, Nagapattinam
Tamil Nadu - India

ABSTRACT
Power utilities in different countries especially in the developing ones are incurring huge losses due to electricity theft. This paper proposes a prepaid energy metering system to control electricity theft. In this system a smart energy meter is installed in every consumer unit and a server is maintained at the service provider side. Both the meter and the server are equipped with GSM module which facilitates bidirectional communication between the two ends using the existing GSM infrastructure. Consumers can easily recharge their energy meter by sending a PIN number hidden in a scratch card to the server using SMS. This paper presents some measures to control meter bypassing and tampering. The bidirectional GSM communication using SMS ensures the effectiveness of these measures. Pilferage of electricity can be substantially reduced by incorporating the proposed measures along with the prepaid metering scheme. Legal actions against dishonest consumers can also be taken in this system.
Keywords:- Electricity Theft; Prepaid Meter, GSM Networks; SMS, Smart Energy Meter

I. INTRODUCTION

Electricity theft has emerged as a serious problem in power sectors especially in the developing countries. A huge amount of revenue is lost due to electricity theft. In some countries this is so severe that governments are incurring losses instead of revenue. In some cases government has to provide subsidies to the power sector to maintain a reasonable price of electricity. The financial loss results in shortage of funds for investments to expand the existing power capacity and as a result governments are failing to satisfy the ever increasing demand of electricity. In some cases this problem has become so extreme that the affected power systems are near bankrupt. Power theft is a concerned issue even in the most efficient power systems like in USA and moderately efficient system like in Malaysia [1]. However, in developing and under developed countries the practice of power theft is so common that it is often kept out of discussion.

Electricity theft includes tampering meters to show a low meter reading, stealing electricity bypassing a meter, billing irregularities and unpaid bills [1]. Billing irregularities comprise inaccurate meter reading taken by bribed service man and intentional fixing of the bill by office staffs in exchange of illicit payments from the consumer.

Different nontechnical and technical methods were proposed in the past to detect electricity pilfering. Nontechnical methods may include inspection of the customers with suspicious load profile [2]. Although periodic inspection can substantially reduce theft, such measure requires large manpower and huge labor. Such effort also fails in most cases due to the dishonesty of the staffs. Some of the technical ways to detect pilferage are use of central observer meter at secondary terminals of distribution transformer [3], harmonic generator [4], genetic support vector machines [5], extreme learning machine [6], and power line impedance technique [7]. However, these technical approaches can be effectively implemented only if proper communication is ensured between the central control station and the appropriate test points. Recently, prepaid energy meters based on GSM network has been proposed [8], [9]. These meters incorporate the facility of prepaid metering system and remote load control. This prepaid metering system can be further matured to address the problem of electricity theft. In this paper, we have proposed a GSM based prepaid energy metering system which deals with different aspects of electricity theft. The proposed system prevents irregularities of billing, reluctance of consumer's to pay bills in time, meter tampering and bypassing.

II. PROPOSED PREPAID METERING SYSTEM

In the proposed system the power utility maintains a server and each consumer is provided an energy meter. The server and prepaid meters use GSM modem and GSM module respectively to communicate with each other using the GSM network. Fig. 1 shows an overview of the proposed prepaid metering system. The energy meter consists of a microcontroller (ATmega 32), energy measuring chip (ADE7751), GSM module (Simens A62 mobile phone in our work), MAX232, current transformers, potential transformers, LCD display and a relay. The energy metering chip produces.

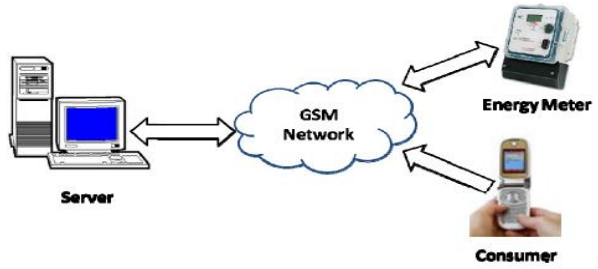

Figure 1. Overview of the proposed prepaid metering system.

Pulses proportional to the energy consumed using the outputs of current and potential transformers. The microcontroller calculates the energy consumption by counting the output pulses of the energy metering chip on an interrupt basis. The microcontroller uses AT command set to communicate with the GSM module (mobile phone). A battery backup is also available in the energy meter. The backup is required to detect electricity theft. Fig. 2 demonstrates the prototype of the energy meter and Fig. 3 shows the simplified block diagram of the meter. The complete circuit diagram of the proposed meter is shown in Fig. 4. The C programming language and the MATLAB software have been used to program the microcontroller and to implement the server, respectively.

The recharging process in the proposed metering system is similar to that of recharging balance in a mobile phone. The user has to buy a scratch card and scratch it to uncover the secret pin number of the corresponding energy unit he has bought. For example, if a user wants to buy 100 units (KWh), he has to pay for the 100 units and obtain a scratch card which holds the secret pin number of the corresponding 100 units. The user has to send the pin number to the server through SMS. The server then checks whether the pin number is valid or not. If the pin number is valid, the server then extracts the information of energy-unit from the pin number (in this case 100 units) and sends it to the meter of the user through GSM network. The household meter then receives the corresponding unit and is activated. As the user consumes energy, the corresponding units are deducted from the total balance and the remaining units are displayed using LCD. After the consumption of the allocated energy, the meter automatically disconnects the load from the main power line using the relay until the user recharges again. Thus the system avoids the irregularities associated with traditional billing system and ensures revenue collection.

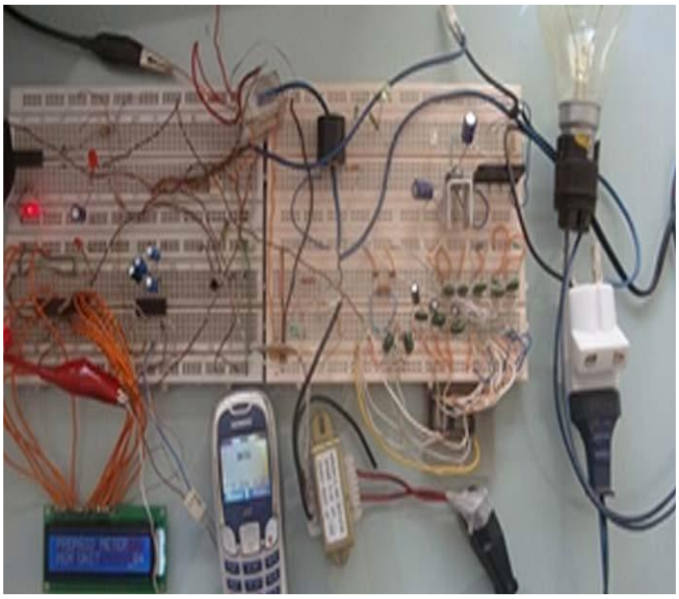

Figure 2. Prototype of the proposed meter.

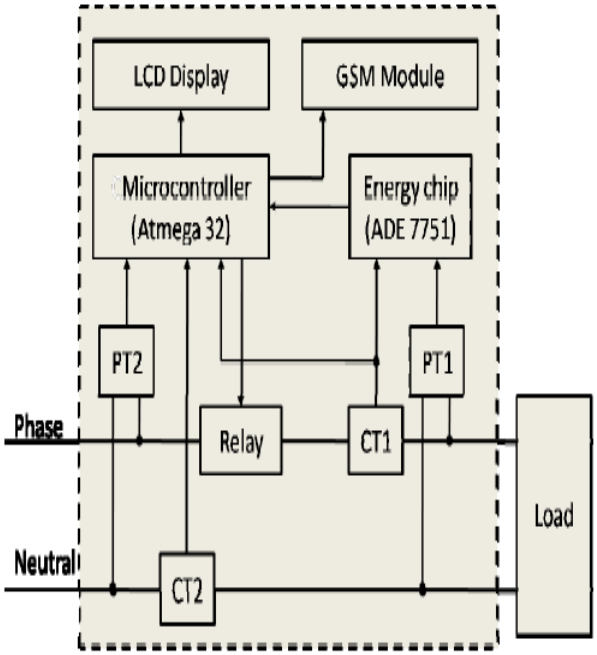

Figure 3. Block diagram of the prepaid energy meter.

A popular method to bypass conventional meter is shorting the phase line as shown in Fig. 5. If only one current transformer is used and connected in the phase line, then the energy measured by the meter will be zero. Another method of bypassing is to disconnect the neutral line as depicted in Fig.6. In this case the potential measured by the potential transformer will be zero and no energy consumptions will be registered by the meter. To prevent these bypassings, two current transformers are used separately in the phase and neutral line in our proposed system. The output voltages of CT1 and CT2 are provided to the ADC inputs of the microcontroller. If the phase line is shorted or the neutral line is disconnected then there will be difference between the output voltages of CT1 and CT2. The microcontroller compares the voltages of CT1 and CT2 and if any significant difference is found, it disconnects the load immediately using the relay. In such events the energy meter warns the server of the corresponding bypassing through SMS. Upon receiving SMS, the server blocks the energy meter and informs the authority. The authority can take legal action against the consumer.

III. MEASURES FOR CONTROLLING ELECTRICITY THEFT

A. Protection against Shorting the Phase Line and Disconnecting the Neutral Line

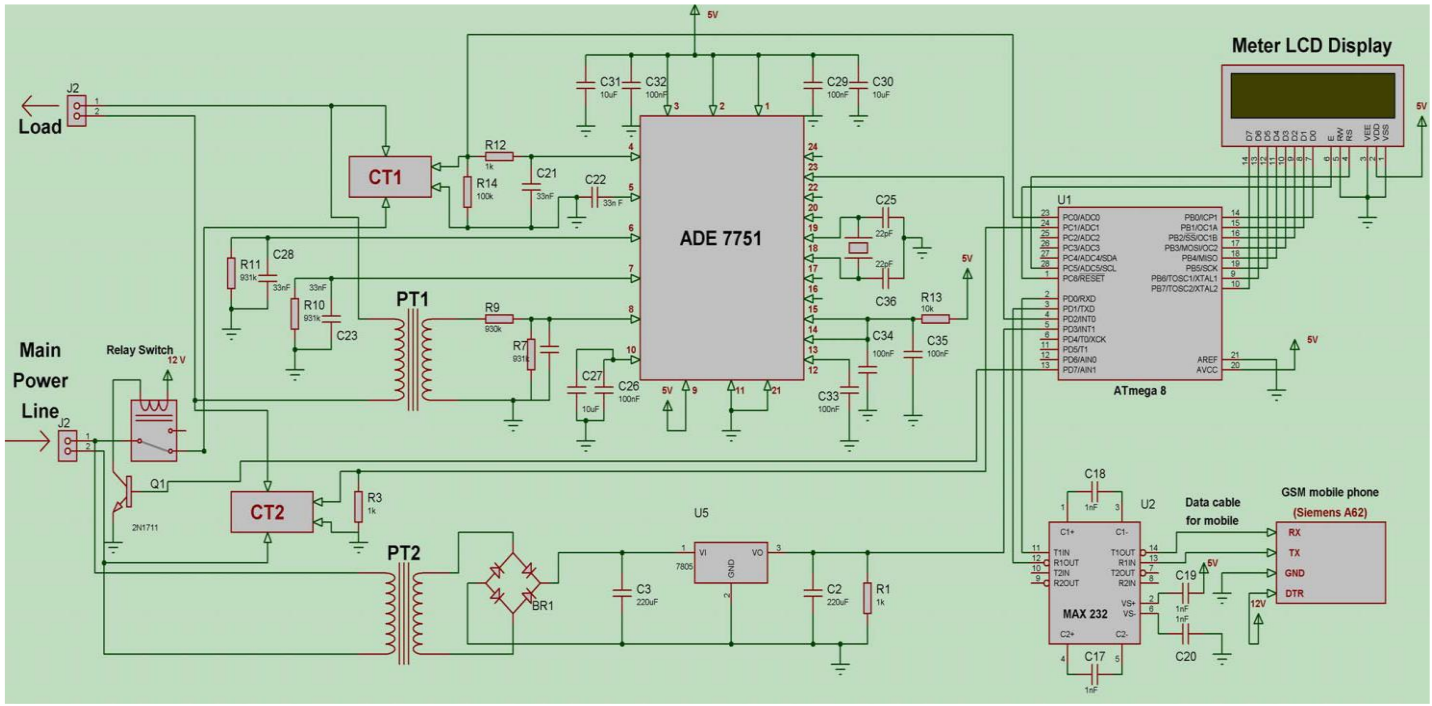

Figure 4. Complete circuit diagram of the proposed prepaid energy meter.

B. Protection against Whole Meter Bypassing

In extreme cases the whole meter can be bypassed as shown in Fig. 7. As a result the meter will detect no energy consumption. To prevent this kind of theft, our proposed energy meter takes several steps. The output of PT2 is converted to 5V dc and is given to the interrupt pin of the microcontroller. When the whole meter is bypassed PT2 detects no voltage and an interrupt is sent to the microcontroller. Theenergy meter then requests the power status of the area, where the meter is located, to the server. If the server confirms that the power supply is available in that area, then the meter immediately disconnects the load and informs the server of the electricity theft. During the whole operation backup from a rechargeable battery is available.

C. Control of Electricity Theft using Observer Meter

Electricity pilfering may occur in the form of unregistered load as shown in Fig. 8. Also radio frequency devices may be used to influence the accuracy of the device [10]. There also exits many named and unnamed engineered ways for electricity theft. These types of theft cannot be detected and controlled using single household meter. To detect such unaccounted theft, an observer meter is used in the proposed system. The observer meter shown in Fig. 9 measures the total energy consumption of several households at specified time intervals. This type of meter can be installed for example outside an apartment building. In that case, this will measure the energy consumed by all the flats in that apartment building. The household meters inform the observer meter of their corresponding measured units through SMS. If the two values differ by a considerable amount, the central meter detects electricity theft. Since, individual meter readings are available to the central meter, it can find out the possible households where theft has occurred on the basis of zero or low energy consumption. The central meter reports the possible locations of theft to the server using SMS. The authority can send technical staffs to check the reported households and can detect the particular dishonest consumer.

In addition to this, the concept of introducing dangerous harmonics can be used [4]. In this scheme, when the observer

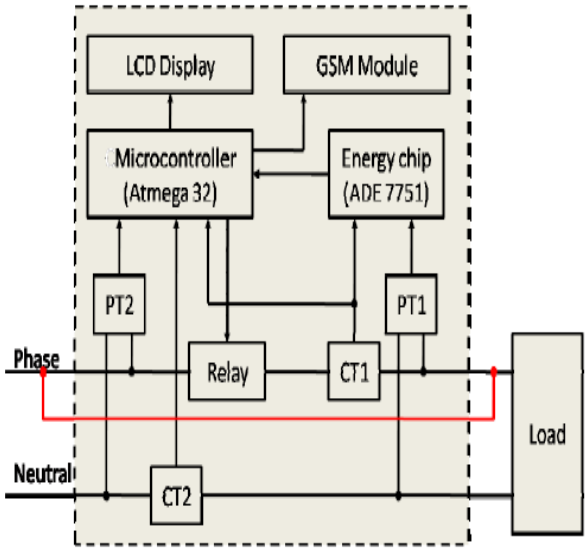

Figure 5. Shorting the phase line.

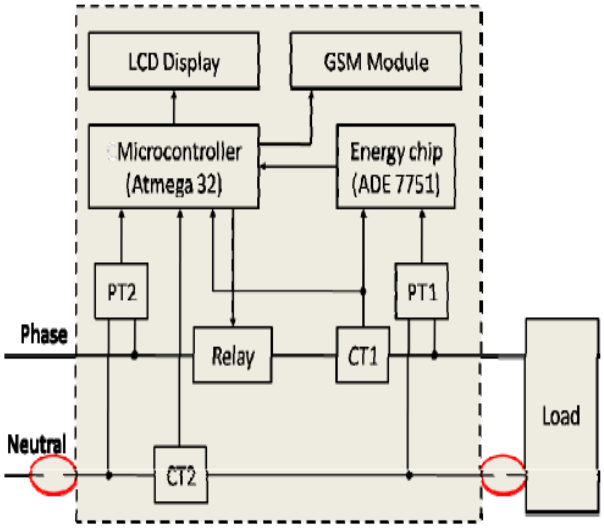

Figure 6. Disconnecting the neutral line.

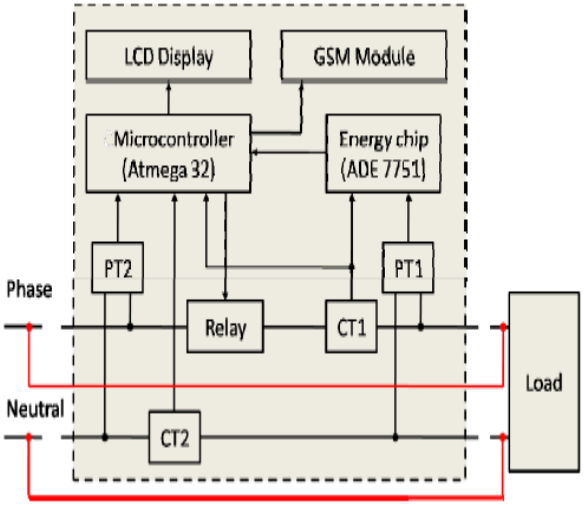

meter detects theft it will isolate the affected part from the incoming power line and will SMS to the household meters to disconnect their corresponding loads. The observer meter will signal the harmonic generator to introduce dangerous harmonics into the household line. Since the genuine loads are separated, the harmonics will only affect the unregistered loads. The purpose of introducing harmonic component is to damage unregistered appliances thus punishing the illegal consumers [10]. However, genuine consumers can suffer in this approach in the sense that their load consumptions will be interrupted for few seconds during the use of harmonics. This interruption may not be comfortable to all consumers. Therefore, this approach is used only when the methods described previously fails to detect electricity theft.

Prepaid energy meter is technique which is cost efficient and can reduce problems associated with billing and also reduces deployment of manpower for taking meter readings. Prepaid energy meter has many advantages both from suppliers as well as consumer's point. The users are not bound to pay excesses
amount of money, users have to pay according to their requirement. It can reduce problems associated with billing consumers living in isolated areas and reduce deployment of manpower for taking meter readings. Prepaid energy meter is more reliable and user friendly.

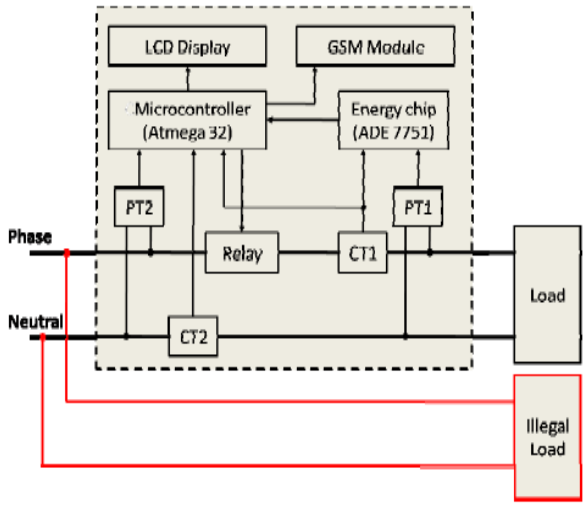

(a)

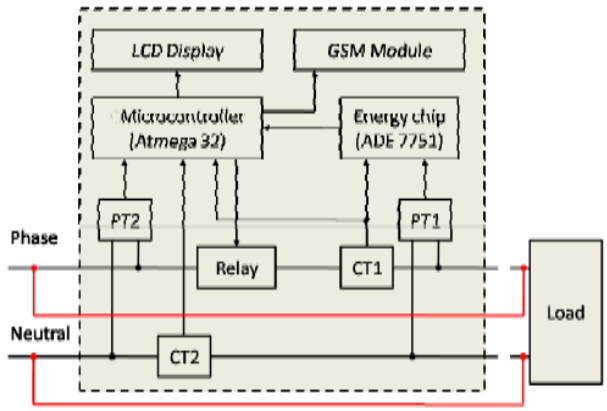

(b)

D. Protection against Tampering

Consumers or professional ones may try to open the energy meter and tamper it to show low or no energy consumptions. To get rid of this problem, two lever switches are used at two sides of the proposed energy meter. One terminal of each lever switch is connected to 5V dc supply and the other one is connected to the microcontroller according to Fig. 10. In normal conditions, the two lever switches will be closed and the microcontroller will detect 5V at its two input pins. If consumer tries to open the energy meter the lever switches are disconnected and the microcontroller will detect 0V at its input pins. If this occurs, the microcontroller immediately notifies the server and disconnects the load from the supply.

IV. CONTROL AND HANDLING ELECTRICITY THEFT

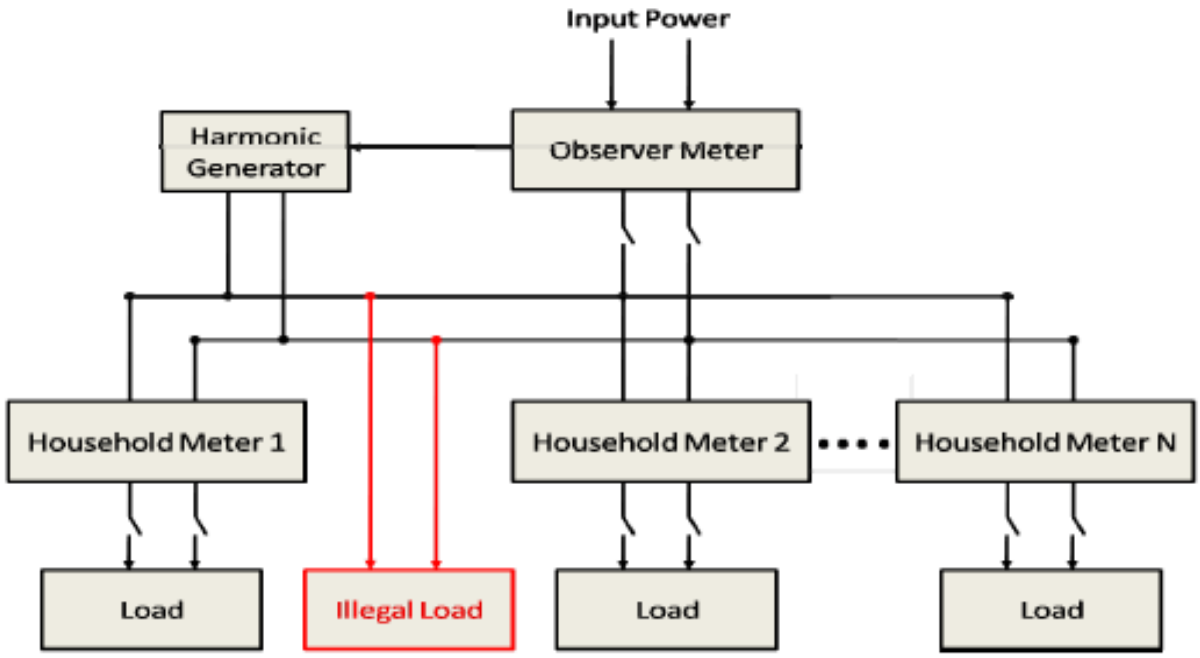

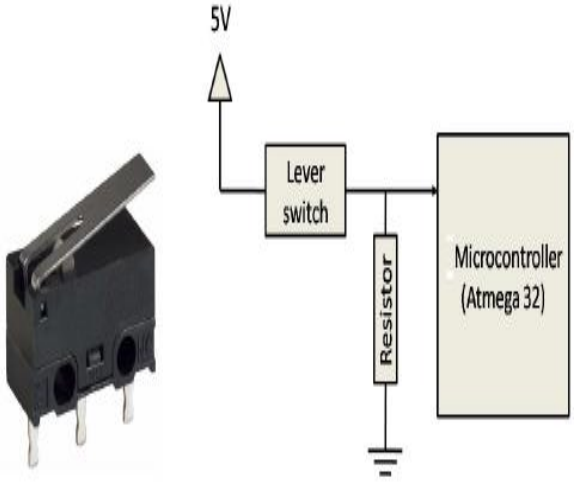

V. DESIGN OF PREPAID ENERGY METER

The proposed idea is not to replace the existing energy meter and chalk out a completely new prepaid meter but up-grade the available energy meters to prepaid meters. Thus, our design primarily has an energy meter, a prepaid card and the communication module encapsulated and provided as an upgrading attachment along with a contactor and a liquid crystal display (LCD).

Energy Meter:

The electromechanical energy meter calculates the electrical energy or units consumed by the load based on the mechanical energy of the disk or rotor. The electronic meter has this existing structure attached with a microcontroller programmed to perform specific calculations and present it in terms of electrical energy units consumed to a prepaid card. The meter is also connected to a contactor apart from the consumer load.

Prepaid Card and Communication Module:

The prepaid card is the most important addition to the design. The power utility sets the amount in the prepaid card to a measure that the consumer recharges the card to, called Fixed Amount. The tariff rates are already programmed and fed into the card. As the load is consumed, the meter sends the units consumed to the prepaid card which continuously converts these units into expenditure at each instant and then subtracts it from the fixed amount. The communication module uses mobile communication to share prepaid card balance with power utility at certain instants as required by utility for tracking the balance and also for any other application e.g. Demand Side Management (DMS) etc. The fixed amount in the prepaid card will go to zero

eventually with the consumption. The consumer can recharge the prepaid card by prepayment through internet. The utility on receipt of recharge request and desired prepaid amount, recharges the customer's energy meter i.e. prepaid card. The prepaid card sends a signal to the contactor for monitoring the supply to the consumer. The communication module has prepaid card encapsulated inside the encryption authentication module which is Embedded Security Access Module (ESAM). It thus enables the card to use the mobile communication to communicate with power utility and share information regarding the card's balance details.

***Contactor**:*

A local contactor is the connecting link between the consumer load and utility supply. The opening and closing of this contactor depends on the balance present in the prepaid card at a moment. While the prepaid card has some fixed amount more than zero, it stays closed and keeps the utility supply uninterrupted to the consumer load. When the card runs out of balance, it opens and disconnects the load from the supply. Hence, even when the energy meter receives voltage supply, it does not reach the load while the contactor is open because the balance in the prepaid card is not available. Since the contactor too will consume some amount of electrical energy, it will be inclusive in the calculations made by meter and prepaid card.

VI. WORKING SCHEME

The scheme for working of the proposed idea is the utility supply is fed to an energy meter which has a prepaid card embedded. The prepaid card feeds a low/high signal i.e. open/close signal to the local contactor depending on the balance left in it. The contactor thus controls the supply to the consumer load, disconnecting it when prepaid card runs out of balance. When prepaid card is short of sufficient balance, the consumer makes a recharge request to the utility by prepayment through internet. The utility having received the recharge amount recharges the prepaid card using mobile communication. The utility also receives information about the balance details from the card for the record purposes.

VII. SMART METERS FOR DEVELOPING COUNTRIES

In many developing countries, conventional energy meters\ are used for billing the energy consumed by customers. For ease of operation of the home appliances, monitoring the grid, improving the power quality, improved load sharing, detecting non-technical losses, and other implied advantages, smart meters are to be introduced in developing countries. Power utility companies worldwide lose about 20 billion dollars each year because of non-technical losses [4]. In addition, growing non-technical losses because of theft and billing irregularities force the utility companies to implement a transparent and genuine metering system. However, deployment of smart grid and smart meter system involves huge budgets. It would be very difficult for utility companies to invest billions of dollars on an infrastructural upgrade that has no direct return on the investment. So, smart meters with minimum required, but essential features may be designed for implementation in countries with weaker economy. So, smart meters might not be implemented for luxury in operation, but they must be introduced in order to fight the basic problems that power utility companies and its customers face. Smart meters with great networking capability and advanced software tools are difficult to tamper and hack, which improves the distribution efficiency. Integration of smart meters enhances facilitation of decentralized generation and power storage devices. In the near future, total energy demand is expected to become double the current demand. In view of this situation, many developing countries do not have resources for the additional capacity addition. To fill this gap, apart from increasing the installed generation capacity, controlling the electricity theft and regularizing the existing electricity customers can manage the load within demands.

VIII. STATUS OF SMART METERING

In view of the advantages and applications, smart meter systems are being under large scale deployment worldwide. For instance, Austin Energy, one of the largest electric utility companies in the US with about 400,000 customers, has begun deploying smart meters to about 260,000 residential customers in 2008. Centerpoint Energy, a Houston based utility

company will have deployed smart meters to about 2 million customers by the year 2012 in the Houston-Metro and Galveston service locations. In US, targeted implementation of smart meters requires an investment of about $50 billion. In North America, penetration rate of smart meters was about 6% in the year 2008 and is expected to reach 89% by 2012 [1]. By the year 2014, worldwide deployment of smart meters is expected to reach about 212 million units. In Italy, Enel, the third-largest energy provider in Europe has started deploying smart meters to about 27 million customers, which is the world's largest smart meter deployment project [8]. In Canada, the government of Ontario has planned to deploy smart meters to about 800,000 consumers including both residential and small businesses by the year 2007 [7]. In Korea, Korea Electric Power Corporation (KEPCO) started implementation of AMR based energy metering system for its industrial customers in 2000. Currently, these meters automatically transmit the energy consumption information from about 130,000 high voltage consumers. Using these smart metering systems, KEPCO provides value added services for about 55,000 of their low-voltage customers [10]. In Australia, the Essential Services Commission has mandated installation of interval meters for 2.6 million electricity consumers in Victoria. In 2007, the Dutch government has proposed a policy that mandated the adoption of smart meters to 7 million residential consumers by the year 2013. Later, the government went back on its policy and left the decision about installation to the consumer's interest because of the privacy and security concerns [4].

IX. CONCLUSION

In this paper, we have proposed a prepaid energy meter which takes advantage of the GSM network that has virtually access to every household and area across different countries. The GSM communication not only implements the idea of prepaid consumption of electricity but also facilitates the utilities to control energy theft using our smart energy meter. In this system, the information of electricity theft is directly reported to the central authority. Therefore, utilities can take immediate legal action against the accused consumer and hence control electricity theft to a great extent. The proposed meter is thus highly useful for power utilities for reducing electricity pilfering and ensuring revenue collection.

REFERENCES

[1] T. B. Smith, "Electricity theft: a comparative analysis," Elsevier Journal Energy Policy, vol. 32, no. 18, pp. 2067-2076, Dec. 2004.

[2] A. J. Dick, "Theft of electricity-how UK electricity companies detect and deter," in proceedings of European Convention on Security and Detection, pp. 90-95, May 1995.

[3] C.J. Bandim, J.E.R. Alves Jr., A.V. Pinto Jr., F.C. Souza, M.R.B. Loureiro, C.A. Magalhaes, and F. Galvez-Durand, "Identification of energy theft and tampered meters using a central observer meter: a mathematical approach," in proceedings of IEEE PES Transmission and Distribution Conference and Exposition, vol. 1, pp. 163-168, Sept. 2003.

[4] S.S.S.R. Depuru, L. Wang, V. Devabhaktuni, "A conceptual design using harmonics to reduce pilfering of electricity," in proceedings of IEEE Power and Energy Society General Meeting, pp. 1-7, Jul. 2010.

[5] J. Nagi, K.S. Yap, S.K. Tiong, S.K. Ahmed, and A.M. Mohammad, "Detection of abnormalities and electricity theft using genetic Support Vector Machines," in proceedings of IEEE Region 10 Conference, pp. 1- 6, Nov. 2008.

[6] A.H. Nizar and Z.Y. Dong, "Identification and detection of electricity customer behaviour irregularities," in proceedings of IEEE Power Systems Conference and Exposition, pp. 1-10, Mar. 2009.

[7] A.Pasdar and S.Mirzakuchaki, "A solution to remote detecting of illegal electricity usage based on smart metering," proceedings of 2nd International Workshop on Soft Computing Applications, pp. 163-167, Aug. 2007.

[8] A. Barua, N. Mohammad, A. I. Abbas, and M. A. Arafat, "Single phase SMS prepaid digital energy meter," unpublished.

[9] A. Barua, N. Mohammad, M. A. Arafat, K. Khan, A. I. Abbas, and R. Chaudhary "Threephase SMS prepaid digital energy meter," International Conference on Electrical and Computer Engineering, Dec. 2012, in press.

[10] S.S.S.R. Depuru, L. Wang, V. Devabhaktuni, and N. Gudi, "Measures and setbacks for controlling electricity theft," in proceedings of North American Power Symposium, pp. 1-8, Sept. 2010.

[11] Devidas, A.R.; Ramesh, M.V. 2010. Wireless Smart Grid Design for Monitoring and Optimizing Electric Transmission in India.

[12] Khan R.H., T.F. Aditi, V. Sreeram and H.H.C. Iu. 2010. A Prepaid Smart Metering Scheme Based on WiMAX Prepaid Accounting Model. Smart Grid and Renewable Energy, Volume 1, Number 2, pp. 63-69.

[13] Raad, M.W.; Sheltami, T.; Sallout, M.2007. A Smart Card Based Prepaid Electricity System. Pervasive Computing and Applications, 2007. ICPCA 2007. 2nd International Conference on , Vol., No., pp.219-224, 26-27.

[14] Shipworth, M., Firth, S.K., Gentry, M.I., Wright, A.J., Shipworth, D.T. and Lomas, K.J. (2010) Central heating thermostat settings and timing: building demographics. Building Research & Information, 38(1),50–69.

[15] Gram-Hansen, K. (2010) Residential heat comfort practices: understanding users. Building Research & Information, 38(2), 175–186.

[16] Guerra-Santin, O. and Itard, L. (2010) Occupants' behaviour: determinants and effects on residential heating consumption. Building Research & Information, 38(3), 318–338.

[17] Hargreaves, T. (2010) The Visible Energy Trial: Insights from Qualitative Interviews. Working Paper No. 141, Tyndall Centre for Climate Change Research, University of East Anglia, Norwich, UK.

[18] Y. Il-Kwon, J. Nam-Joon, and K. Young-Il, "Status of advanced metering infrastructure development in Korea," in Proc. Transmission & Distribution Conference & Exposition: Asia and Pacific, Seoul, South Korea, Oct. 2009, pp. 1 – 3.

[19] A. Barua, N. Mohammad, M. A. Arafat, K. Khan, A. I. Abbas, and R. Chaudhary "Threephase SMS prepaid digital energy meter,"International Conference on Electrical and Computer Engineering, Dec.2012, in press.

[20] S.S.S.R. Depuru, L. Wang, V. Devabhaktuni, and N. Gudi, "Measuresand setbacks for controlling electricity theft," in proceedings of North American Power Symposium, pp. 1-8, Sept. 2012.